WESTLAKE ROYAL BUILDING PRODUCTS

PPSS AND PPVS VINYL SOFFIT PRODUCTS (HVHZ)

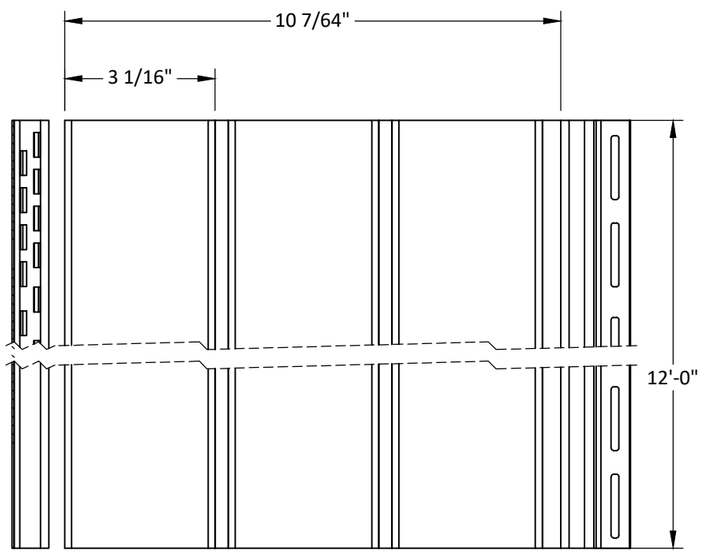

1 PPSS VINYL SOFFIT - SOLID
EXTRUDED PVC .042" THICK

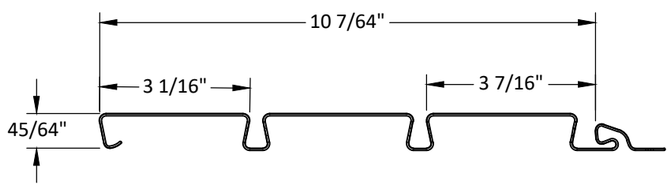

2 PPVS VINYL SOFFIT - VENTED
EXTRUDED PVC .042" THICK

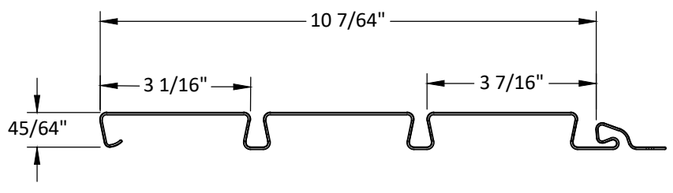

3 1JNU J-CHANNEL
EXTRUDED PVC .042" THICK

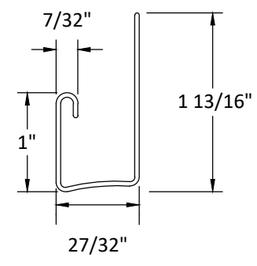

GENERAL NOTES:

1. THE PRODUCT SHOWN HEREIN IS DESIGNED AND MANUFACTURED TO COMPLY WITH THE CURRENT FLORIDA BUILDING CODE (FBC), **INCLUDING** HVHZ AND HAS BEEN EVALUATED ACCORDING TO THE FOLLOWING:
   - TAS 202-94
   - TAS 203-94
2. PRODUCT IS EXEMPT FROM IMPACT TESTING REQUIREMENTS WHEN INSTALLED OVER WALL CONSTRUCTION AS DETAILED ON SHEET 2.
3. ADEQUACY OF THE EXISTING STRUCTURAL CONCRETE/MASONRY AND 2X FRAMING AS A MAIN WIND FORCE RESISTING SYSTEM CAPABLE OF WITHSTANDING AND TRANSFERRING APPLIED PRODUCT LOADS TO THE FOUNDATION IS THE RESPONSIBILITY OF THE ENGINEER OR ARCHITECT OF RECORD FOR THE PROJECT OF INSTALLATION.

DESIGN PRESSURE TABLE:

DESIGN PRESSURE RATING
+50.0/-42.0 PSF

TABLE OF CONTENTS

SHEET	SHEET DESCRIPTION
1	DESIGN PRESSURE TABLES, GENERAL NOTES, & INSTALLATION NOTES
2	INSTALLATION DETAILS

3. 2X BUCKS (WHEN USED) SHALL BE DESIGNED AND ANCHORED TO PROPERLY TRANSFER ALL LOADS TO THE STRUCTURE. BUCK DESIGN AND INSTALLATION IS THE RESPONSIBILITY OF THE ENGINEER OR ARCHITECT OF RECORD FOR THE PROJECT OF INSTALLATION.
4. THE INSTALLATION DETAILS DESCRIBED HEREIN ARE GENERIC AND MAY NOT REFLECT ACTUAL CONDITIONS FOR A SPECIFIC SITE. IF SITE CONDITIONS CAUSE INSTALLATION TO DEVIATE FROM THE REQUIREMENTS DETAILED HEREIN, A LICENSED ENGINEER OR ARCHITECT SHALL PREPARE SITE SPECIFIC DOCUMENTS FOR USE WITH THIS DOCUMENT IN NON-HVHZ AREAS. IN HVHZ AREAS, ONE-TIME APPROVAL TO BE OBTAINED FROM MIAMI-DADE RER OR AHJ.
5. VINYL SOFFIT SHALL MEET THE REQUIREMENTS OF CURRENT FBC SECTION. APPLICATIONS OF VINYL SOFFITS SHALL MEET SECTION CHAPTER 16 & 17 OF THE FBC.
6. INSTALLATION OF SOFFIT ACCESSORIES SUCH AS CORNER POSTS, STARTER STRIPS, TRIMS AROUND OPENINGS SHALL BE DONE IN ACCORDANCE WITH THE FLORIDA BUILDING CODE AND THE MANUFACTURER'S INSTRUCTIONS.

INSTALLATION NOTES:

1. ONE (1) INSTALLATION FASTENER IS REQUIRED AT EACH ANCHOR LOCATION SHOWN.
2. INSTALLATION FASTENERS SHALL BE AS LISTED AND SPACED AS SHOWN ON DETAILS. FASTENER EMBEDMENT TO BASE MATERIAL SHALL BE BEYOND WALL DRESSING.
3. INSTALLATION FASTENERS AT SOFFIT ENDS SHALL BE SPACED 16" O.C. ALONG SOFFIT EDGE INTO BATTENS. SEE DETAIL A/2.
4. INSTALLATION FASTENERS AND ASSOCIATED HARDWARE MUST BE MADE OF CORROSION RESISTANT MATERIAL OR HAVE A CORROSION RESISTANT COATING.
5. INSTALLATION FASTENERS SHALL BE INSTALLED IN ACCORDANCE WITH ANCHOR MANUFACTURER'S INSTALLATION INSTRUCTIONS, AND FASTENERS SHALL NOT BE USED IN SUBSTRATES WITH STRENGTHS LESS THAN THE MINIMUM STRENGTH SPECIFIED BY THE ANCHOR MANUFACTURER.
6. FOR ANCHORING SOFFIT INTO FURRING STRIPS, USE ELECTRO-GALVANIZED ROOFING NAILS WITH 1/8" SHANK, 3/8" HEAD AND 3/4" x 1/16" WASHER. NAIL TO BE OF SUFFICIENT LENGTH TO ACHIEVE A 5/8" MINIMUM EMBEDMENT INTO SUBSTRATE WITH 5/16" MINIMUM EDGE DISTANCE. PANELS TO BE INSTALLED AT EACH SOFFIT PANEL.
7. INSTALLATION ANCHOR CAPACITIES FOR PRODUCTS HEREIN ARE BASED ON SUBSTRATE MATERIALS WITH THE FOLLOWING PROPERTIES:
   A. WOOD - MINIMUM SPECIFIC GRAVITY OF 0.50.

Westlake Royal Building Products™
WESTLAKE ROYAL BUILDING PRODUCTS
2801 POST OAK BLVD. SUITE 600
HOUSTON, TX 77056
PH: (614) 754-3488

TITLE: *PPSS AND PPVS VINYL SOFFITS*
DESIGN PRESSURE TABLE
INSTALLATION & GENERAL NOTES

PREPARED BY:
BUILDING DROPS, INC.
398 E. DANIA BEACH BLVD., STE. 338
DANIA BEACH, FL 33004
PH: (954)399-8478
FAX: (954)744.4738
WEB: www.buildingdrops.com

REMARKS	BY	DATE
2023 CODE CHANGE	MG	08/23

THE INSTALLATION DETAILS DESCRIBED HEREIN ARE GENERIC AND MAY NOT REFLECT ACTUAL CONDITIONS FOR A SPECIFIC SITE. IF SITE CONDITIONS CAUSE INSTALLATION TO DEVIATE FROM THE REQUIREMENTS DETAILED HEREIN, A LICENSED ENGINEER OR ARCHITECT SHALL PREPARE SITE SPECIFIC DOCUMENTS FOR USE WITH THIS DOCUMENT

Digitally signed by Hermes F. Norero, P.E.
Reason: I am approving this document
Date: 2023.08.17 18:41:28 -02'00'

HERMES F. NORERO LICENSE No. 73778 STATE OF FLORIDA PROFESSIONAL ENGINEER
HERMES F. NORERO, P.E.
FLORIDA P.E. LICENSE No. 73778
BUILDING DROPS, INC
398 E. DANIA BEACH BLVD. # 338
DANIA BEACH, FL 33004
FBPE CERT. OF AUTHORIZATION No. 29578

FL #: FL42319

DATE: 09.30.22

DWG. BY: MS | CHK. BY: HFN

SCALE: NTS

DWG. #: WLR002

SHEET: 1 OF 2

8/17/2023 12:19 PM
z:\projects\westlake royal building products\cc-23-0709 - columbus, oh - fbc 2023 code change (8th edition)\dwgs\fl15518\wlr002.dwg

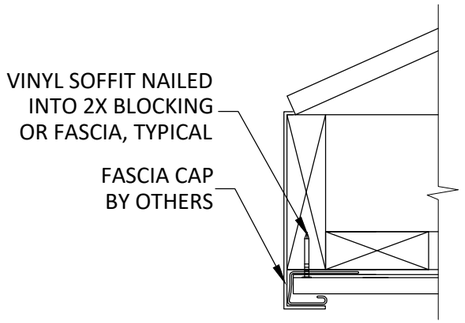

ALTERNATE FASCIA CONDITION

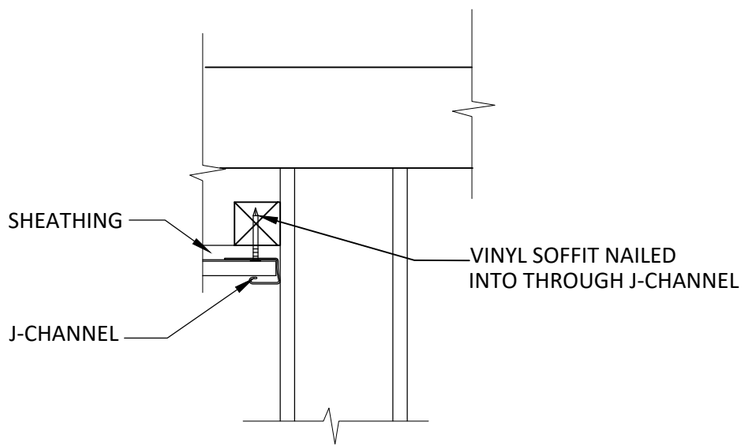

ALTERNATE WOOD WALL INSTALLATION

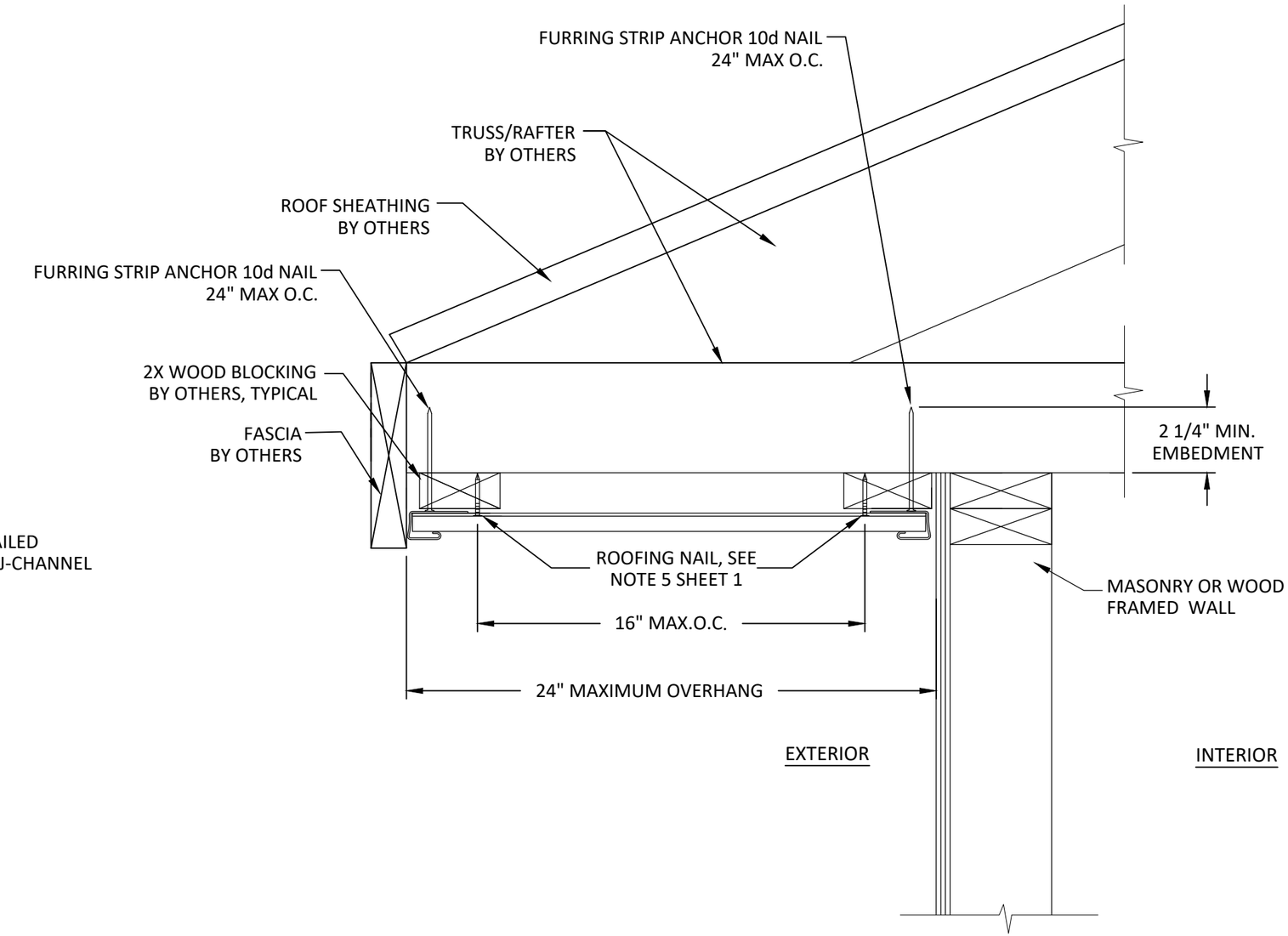

A
2

VERTICAL SECTION

SOFFIT INSTALLATION DETAIL
2X WOOD FRAMING OR 1X FURRING STRIP

Westlake Royal Building Products™

WESTLAKE ROYAL BUILDING PRODUCTS
2801 POST OAK BLVD. SUITE 600
HOUSTON, TX 77056
PH: (614) 754-3488

TITLE: *PPSS AND PPVS VINYL SOFFITS*

INSTALLATION DETAILS

PREPARED BY:
BUILDING DROPS, INC.
398 E. DANIA BEACH BLVD., STE. 338
DANIA BEACH, FL 33004
PH: (954)399-8478
FAX: (954)744.4738
WEB: www.buildingdrops.com

REMARKS	BY	DATE
2023 CODE CHANGE	MG	08/23

THE INSTALLATION DETAILS DESCRIBED HEREIN ARE GENERIC AND MAY NOT REFLECT ACTUAL CONDITIONS FOR A SPECIFIC SITE. IF SITE CONDITIONS CAUSE INSTALLATION TO DEVIATE FROM THE REQUIREMENTS DETAILED HEREIN, A LICENSED ENGINEER OR ARCHITECT SHALL PREPARE SITE SPECIFIC DOCUMENTS FOR USE WITH THIS DOCUMENT

HERMES F. NORERO LICENSE No. 73778 STATE OF FLORIDA PROFESSIONAL ENGINEER

HERMES F. NORERO, P.E.
FLORIDA LICENSE No. 73778
BUILDING DROPS, INC
398 E. DANIA BEACH BLVD. # 338
DANIA BEACH, FL 33004
FBPE CERT. OF AUTHORIZATION No. 29578

FL #: FL42319

DATE: 09.30.22

DWG. BY: MS | CHK. BY: HFN

SCALE: NTS

DWG. #: WLR002

SHEET: 2 OF 2

8/17/2023 12:19 PM
z:\projects\westlake royal building products\cc-23-0709 - columbus, oh - fbc 2023 code change (8th edition)\dwgs\fl15518\wlr002.dwg